PLEASE CHECK WEB SITE AT WWW.ONBOARDSYSTEMS.COM FOR THE LATEST REVISION OF THIS MANUAL

3,500 Pound Big Mouth Cargo Hook Kit

for the

Eurocopter AS350

AS350 Kit Part Number 200-229-00

Owner's Manual

Owner's Manual Number 120-072-00
Revision 5
January 18, 2007

ONBOARD™ SYSTEMS
INTERNATIONAL

13915 NW 3rd Court Vancouver Washington 98685 USA
Phone: 360-546-3072 Fax: 360-546-3073 Toll Free: 800-275-0883
www.OnboardSystems.com

This page intentionally left blank.

RECORD OF REVISIONS

Revision	*Date*	*Page(s)*	*Reason for Revision*
1	2-21-00	*	Revised manual to incorporate optional cannon plug location, allen head plug and new wire harness connector.
2	7-23-02	1-1, 2-4, Section 4	Added optional 290-744-00 release fitting to BOMs. Defined Sling installation of release fitting. Moved Hook maintenance instructions to service document. 122-002-00.
3	9/17/02	Title, 4-3	Factory address change.
4	03/13/06	Title, T.O.C, 1-1 Section 2	Removed references to AS355 aircraft.
5	01/18/07	2-4, 2-6, & 2-8	Updated figures to show new knob configuration.
		Section 4	Updated maintenance information to refer to service manual 122-002-00.
		TOC, Section 1, 2-4, 2-6, 2-7, 2-8 & Section 3	Updated Warnings, Cautions, and Notes to current format.
			Added “minimum” to .125” free play (page 2-4, 2-6).

Register Your Products for Automatic Notifications

Onboard Systems offers a free notification service via fax or email for product alerts and documentation updates. By registering your Onboard Systems products at our website, we will be able to contact you if a service bulletin is issued, or if the documentation is updated.

You can choose to receive notices on an immediate, weekly, or monthly schedule via fax, email or both methods. There is no charge for this service. Please visit our website at www.onboardsystems.com/notify.php to get started.

This page intentionally left blank.

CONTENTS

CONTENTS, continued

Section 1
General Information

Introduction

The 200-229-00 Cargo Hook Kits are approved as replacements for the following Cargo Hooks on the Eurocopter AS-350B, AS-350B1, AS350B2, AS350BA and AS-350D.

Table 1-1 Cargo Hooks

P/N	Manufacture
17149-1	Breeze-Eastern
14027-4	Breeze-Eastern
S1609-3	Siren
S1609-5	Siren
S1609-6	Siren

Warnings, Cautions and Notes

The following definitions apply to Warnings, Cautions and Notes used in this manual.

WARNING

Means that if this information is not observed, serious injury, death or immediate loss of flight safety could occur.

CAUTION

Means that there is a risk of injury or degradation in performance of equipment if this information is not observed.

NOTE

Draws the reader's attention to information which may not be directly related to safety, but which is important or unusual.

Bill of Materials

The following items are included with the AS350 Cargo Hook Kit, P/N 200-229-00, if shortages are found contact the company from whom the system was purchased.

Table 1-2 AS 350 Bill of Materials

Part Number	Description	Quantity
528-017-00	Cargo Hook	1
290-403-00	Hook to Manual Release Adapter	1
290-744-00	HK Manual Release Adapter	1
510-252-00	Jam Nut	1
230-077-00	Connector Assembly	1
512-010-00	Adel Clamp	2
290-360-00	Travel Limit Bumper	1
120-072-00	Owner's Manual	1
122-002-00	Big Mouth Hook Service Manual	1

Inspection

Inspect the kit items for evidence of damage, corrosion and security of lock wire and fasteners. If damage is evident, do not use the items until they are repaired.

Specifications

Table 1-3 Specifications

Design load	3,500 lb. (1,580 kg.)
Design ultimate strength	15,750 lb. (7,140 kg.)
Electrical release capacity	8,750 lb. (3,970 kg.)
Mechanical release capacity	8,750 lb. (3,970 kg.)
Force required for mechanical release at 3,500 lb.	10 lb. Max. (.600” travel)
Electrical requirements	22-28 VDC, 9.8–12.5 amps
Minimum release load	10 pounds
Unit weight	5.75 pounds (2.6 kg.)
Mating electrical connector	PC06A8-2S SR

Theory of Operation

The primary elements of the Cargo Hook are the load beam, the internal mechanism, and a DC solenoid. The load beam supports the load and is latched through the internal mechanism. The DC solenoid and an external manual release cable provide the means for unlatching the load beam.

The load beam is normally returned to its closed position after release of the load by a spring in the internal mechanism. In the closed position, a latch engages the load beam and latches it in this position. The load is attached to the load beam by passing the cargo sling ring into the throat of the load beam past a spring-loaded keeper, which secures the load.

To release the load, the latch is disengaged from the load beam. With the latch disengaged, the weight of the load causes the load beam to swing to its open position, and the cargo sling slides off the load beam. A spring in the internal mechanism then drives the load beam back to its closed and latched position.

A load release can be initiated by three different methods. Normal release is achieved by pilot actuation of the push-button switch in the cockpit. When the push-button switch is pressed, it energizes the DC solenoid in the Cargo Hook, and the solenoid opens the latch in the internal mechanism. In an emergency, release can be achieved by operating a mechanical release cable. The manual release cable operates the internal mechanism of the Cargo Hook to unlatch the load beam. The load can also be released by the actuation of a knob located on the side of the Cargo Hook.

This page intentionally left blank.

Section 2
Installation Instructions

These procedures are provided for the benefit of experienced aircraft maintenance facilities capable of carrying out the procedures. They must not be attempted by those lacking the necessary expertise.

Cargo Hook Configuration

Prior to installing the cargo hook, it must be configured for the specific frame it will be used on, see Figure 2-1.

Both Sling and Swing installations require the travel limit bumper to be installed in the top of the hook as shown. Install the travel limit bumper by pushing it in place with a blunt tool. The taller end of the bumper should be on the aft side of the hook.

The Swing installation requires an additional configuration change to relocate the electrical connector to the top solenoid cover outlet. This change improves the clearance between the wire harness connector and the Swing frame. Refer to the cargo hook service manual 122-002-00 for the item location.

To relocate the electrical connector perform the following steps:

- Remove the solenoid cover by removing the safety wire on the solenoid cover bolts and removing the two solenoid cover bolts and washers.
- Remove the allen head plug and bulkhead nut located in the top of the solenoid cover.
- Remove the cannon plug outside nut and carefully slide the plug back out of the solenoid cover aft hole.
- Reinstall the allen head plug and bulkhead nut in the solenoid cover aft hole and the cannon plug in the top hole. Align the cannon plug so the diode points toward the side plate and ensure the solenoid wiring is stowed down inside the solenoid cover.
- Re-install the solenoid cover and secure the two solenoid cover bolts with safety wire.

Cargo Hook Configuration, continued

Figure 2-1 Cargo Hook Configurations

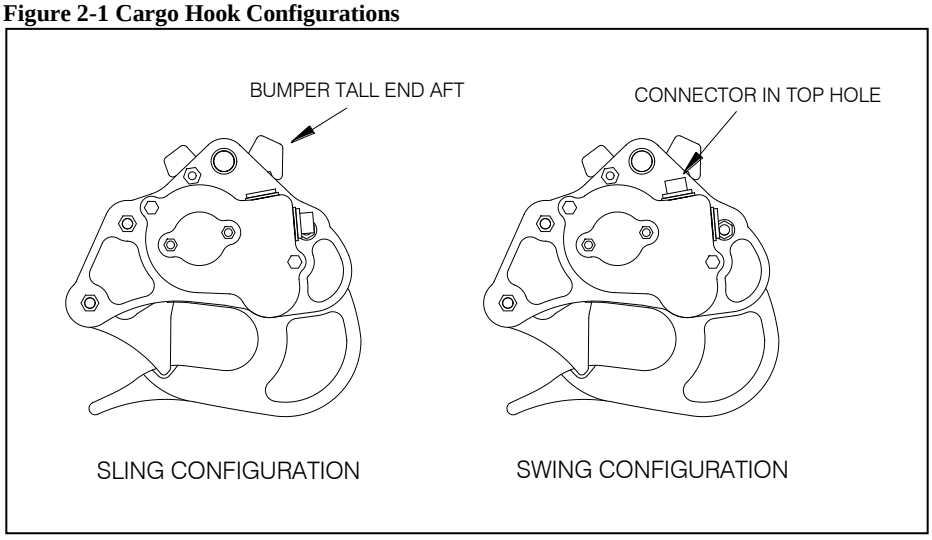

AS 350 *Sling* Cargo Hook Removal

Remove the old Cargo Hook from the aircraft by disconnecting the hook from the load link (gauge shackle) and the manual and electrical release cables.

AS 350 *Sling* Cargo Hook Installation

Inspect the load link, universal joint and attaching hardware to ensure that they are in serviceable condition.

Attach the new Cargo Hook to the load link using the hardware supplied, as illustrated below. The cargo hook load beam should point forward.

Figure 2-2 Sling Assembly Installation

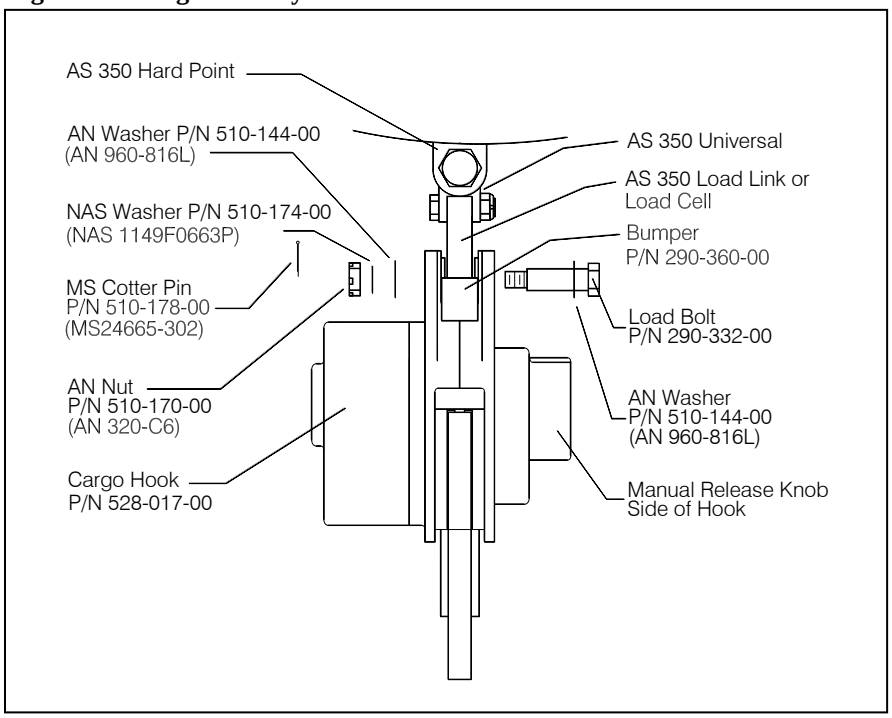

AS 350 *Sling* Cargo Hook Installation, continued

Remove the manual release cover from the new Cargo Hook. When Eurocopter aft release cable AS22-08 is installed, manual release adapter 290-744-00 will provide the best release cable free play adjustment. For other cable configurations manual release cable adapter 290-403-00 will provide best adjustment. Thread appropriate adapter and jam nut 510-252-00 into the new Cargo Hook. Connect the manual release cable to the Adapter. Place the cable ball end fitting into the hook manual release fork fitting as illustrated in Figure 2-3. Adjust the adapter to give a minimum of .125" of free play with the manual release lever in the non-release position. Tighten the jam nut against the hook and safety-wire the manual release cable nut to the jam nut and the cover screw.

Figure 2-3 Manual Release Cable Rig

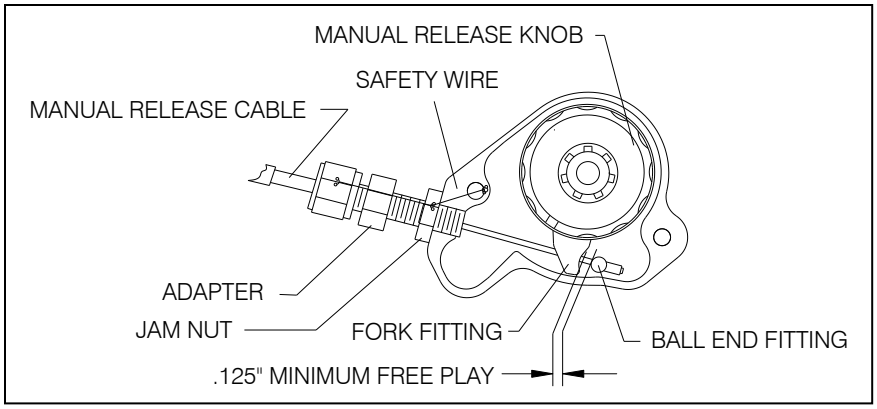

Connect the cargo hook electrical release cable connector to the Cargo Hook. Listed below is the pin out for the cargo hook connector. Safety wire the connector.

Table 2-1 Cargo Hook Connector

Pin	*Function*
A	Ground
B	Power

CAUTION

The Cargo Hook is equipped with a suppression diode that will be damaged if the Cargo Hook electrical connections are reversed. Do not attach the electrical connector until the polarity of the aircraft connector is determined to be compatible with the Cargo Hook connector listed in Table 2-1.

AS 350 *Swing* Cargo Hook Removal

Remove the old Cargo Hook from the aircraft by disconnecting the hook from the load link (gauge shackle) and the manual and electrical release cables.

AS 350 *Swing* Cargo Hook Installation

Inspect the swing assembly components to insure that they are in serviceable condition.

Attach the new Cargo Hook to the load link using the hardware supplied, as illustrated below. The bolt attaching the load cell link or load link to the universal should be installed with the head of the bolt on the solenoid side of the cargo hook. This bolt orientation improves control of the cargo hook range of travel. The cargo hook load beam should point forward.

Figure 2-4 Swing Assembly Installation

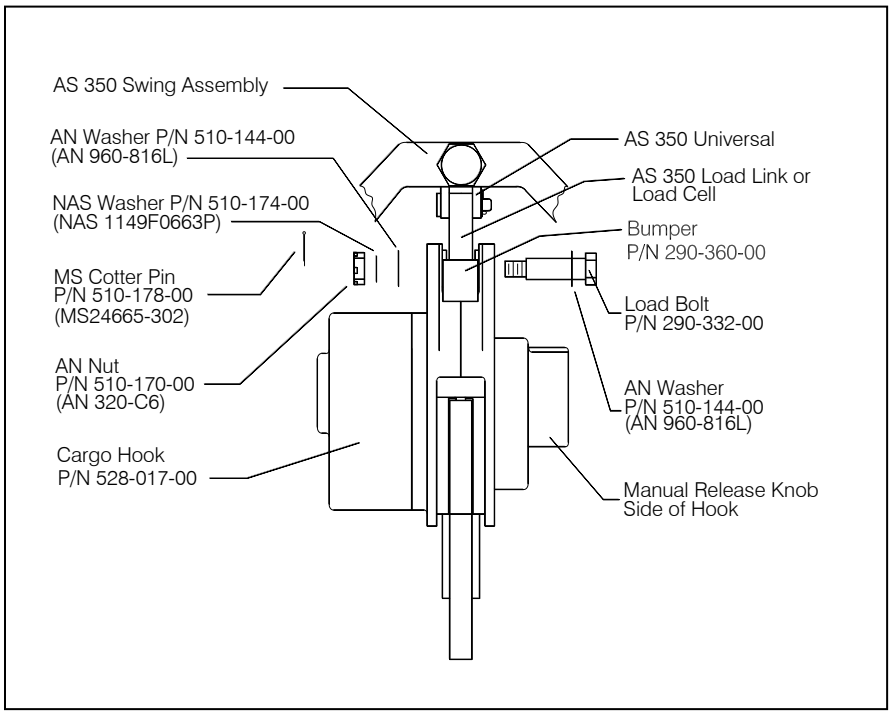

AS 350 *Swing* Cargo Hook Installation, continued

Remove the manual release cover from the new Cargo Hook. Thread the Hook to Manual Release Adapter, P/N 290-403-00 into the new Cargo Hook. Connect the manual release cable to the Adapter. Place the cable ball end fitting into the hook manual release fork fitting as illustrated in Figure 2-5. Adjust the adapter to give a minimum .125” of free play with the manual release knob in the non-release position. Tighten the jam nut against the hook and safety wire the manual release cable nut to the jam nut and to the cover screw. If a Siren cargo hook is to be replaced it will be necessary to replace the manual release cable with a Eurocopter P/N 704A31-813-010 (Siren P/N AS22-18) or another approved cable. This is the cable used with the Breeze-Eastern Cargo Hook.

Figure 2-5 Manual Release Cable Rig

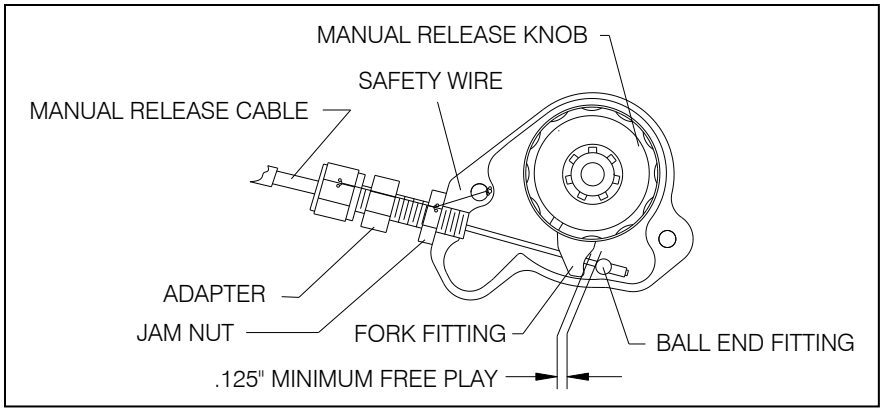

Secure the adel clamps to the lower screws on the cargo hook manual release and electrical release sides as illustrated. Safety-wire the screws.

Figure 2-6 Adel Clamp Installation

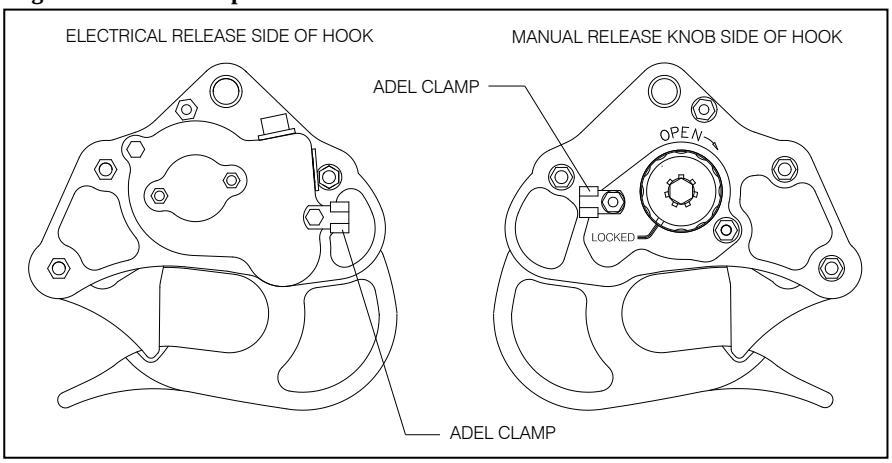

AS 350 *Swing* Cargo Hook Installation, continued

If the hook removed was manufactured by Siren or if it was a Breeze-Eastern 14027-4 it will be necessary to replace the connector on the electrical release cable with the one supplied with the Cargo Hook Kit. If preferred a short adapter cable can be fabricated to connect the electrical release cable to the hook. Listed below is the pin out for the cargo hook connector.

Connect the cargo hook electrical release cable connector to the Cargo Hook and secure with safety wire.

Table 2-2 Cargo Hook Connector

Pin	*Function*
A	Ground
B	Power

CAUTION

The Cargo Hook is equipped with a suppression diode that will be damaged if the Cargo Hook electrical connections are reversed. Do not attach the electrical connector until the polarity of the aircraft connector is determined to be compatible with the Cargo Hook connector listed in Table 2-2.

Attach the two elastic cords that were previously removed to the adel clamps that are supplied with the Cargo Hook Kit. Refer to the illustration below.

Figure 2-7 Swing Assembly Overview

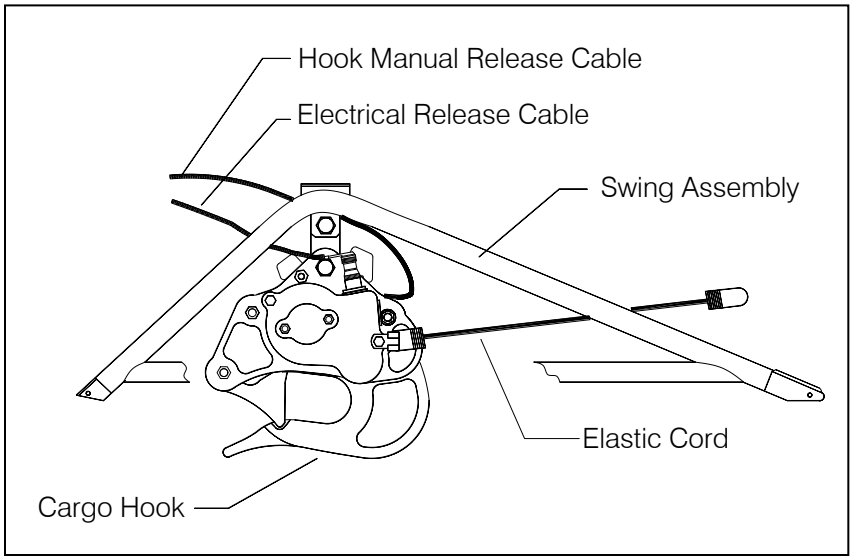

Installation Warning

WARNING

Un-commanded cargo hook release will happen if the manual and electrical release cables are improperly restrained. The cables must not be the stops that prevent the Cargo Hook from swinging freely in all directions. If the Cargo Hook loads cause the hook to strain against the manual release cable the swaged end of the cable may separate allowing the inner cable to activate the cargo hook manual release mechanism. The result is an un-commanded release. Ensure that no combination of cyclic stick or Cargo Hook position is restrained by the manual or electrical release cables.

Figure 2-8 Un-commanded Release From Incorrectly Secured Cable

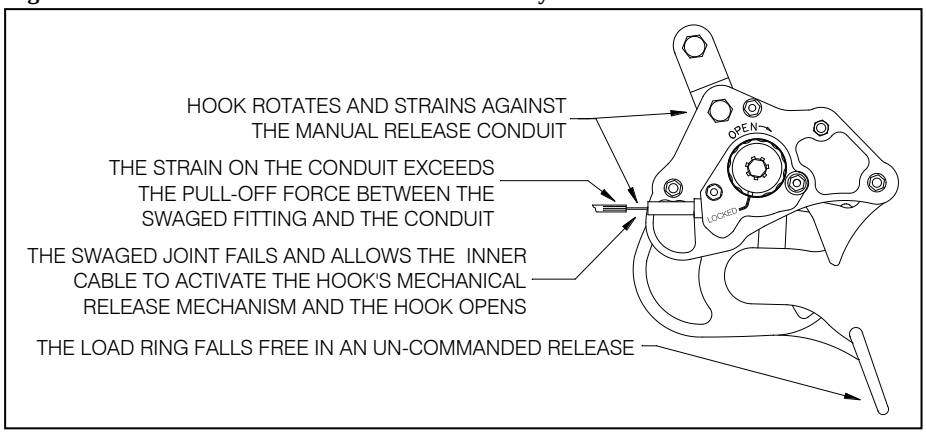

Installation Check-Out

After installation of the Cargo Hook, perform the following functional checks.

1. Swing the installed Cargo Hook to ensure that the manual release cable assembly and the electrical release cable have enough slack to allow full swing of the suspension assembly without straining or damaging the cables. The cables must not be the stops that prevent the Cargo Hook from swinging freely in all directions.
2. Apply 10-20 pounds to the cargo hook load beam and pull the handle operated cargo hook mechanical release, the Cargo Hook should release.
3. Close the cargo hook release circuit breaker and position the battery switch to the ON position. Apply 10-20 pounds to the cargo hook load beam and depress the cargo hook electrical release button, the Cargo Hook should release.
4. See the Eurocopter Helicopter service instructions for your specific helicopter model for additional installation instructions.

Component Weights

The weight of the cargo hook is listed in Table 2-3.

Table 2-3 Component Weights

Item	Weight lbs (kgs)
Cargo Hook	5.75 (2.61)

Paper Work

Remove the Flight Manual Supplement from the back of this manual and place it into the Rotorcraft Flight Manual. In the US, fill in FAA form 337 for the initial installation. This procedure may vary in different countries. Make the appropriate aircraft log book entry.

This page intentionally left blank.

Section 3

Operation Instructions

Operating Procedures

Prior to each job perform the following:

1. Ensure that the Cargo Hook has been properly installed and that the manual and electrical release cables do not limit the movement of the hook.

2. Be completely familiar with this manual, particularly the Cargo Hook rigging section.

3. Be completely familiar with all Eurocopter Helicopter Cargo Hook operating instructions.

4. Activate the electrical system and press the release button to ensure the cargo hook electrical release is operating correctly. The Cargo Hook must re-latch after release. If the hook does not re-latch do not use the unit until the difficulty is resolved.

NOTE

The cargo hook release solenoid is intended to be energized only intermittently. Depressing the electrical release button continuously in excess of 20 seconds will cause the release solenoid to overheat, possibly causing permanent damage.

5. Activate the manual release knob to test the cargo hook manual release mechanism. The mechanism should operate smoothly and the Cargo Hook must re-latch after release. If the hook does not relatch do not use the unit until the difficulty is resolved.

See the Cargo Hook Service Manual and the Eurocopter service instructions that cover the original Cargo Hook installation for additional instructions.

Cargo Hook Rigging

Extreme care must be exercised in rigging a load to the Cargo Hook. If the load ring is too big it may work its way around the end of the load beam and be supported for a time on the keeper and then fall free. If the load ring is too small it may jam itself against the load beam during an attempted release. The following illustrations show recommended configurations and potential difficulties that must be avoided.

WARNING

The examples shown are not intended to represent all problem possibilities. It is the responsibility of the operator to assure the hook will function properly with the rigging.

Cargo Hook Rigging, continued

Figure 3-1 Examples of Correct and Incorrect Cargo Hook Rigging

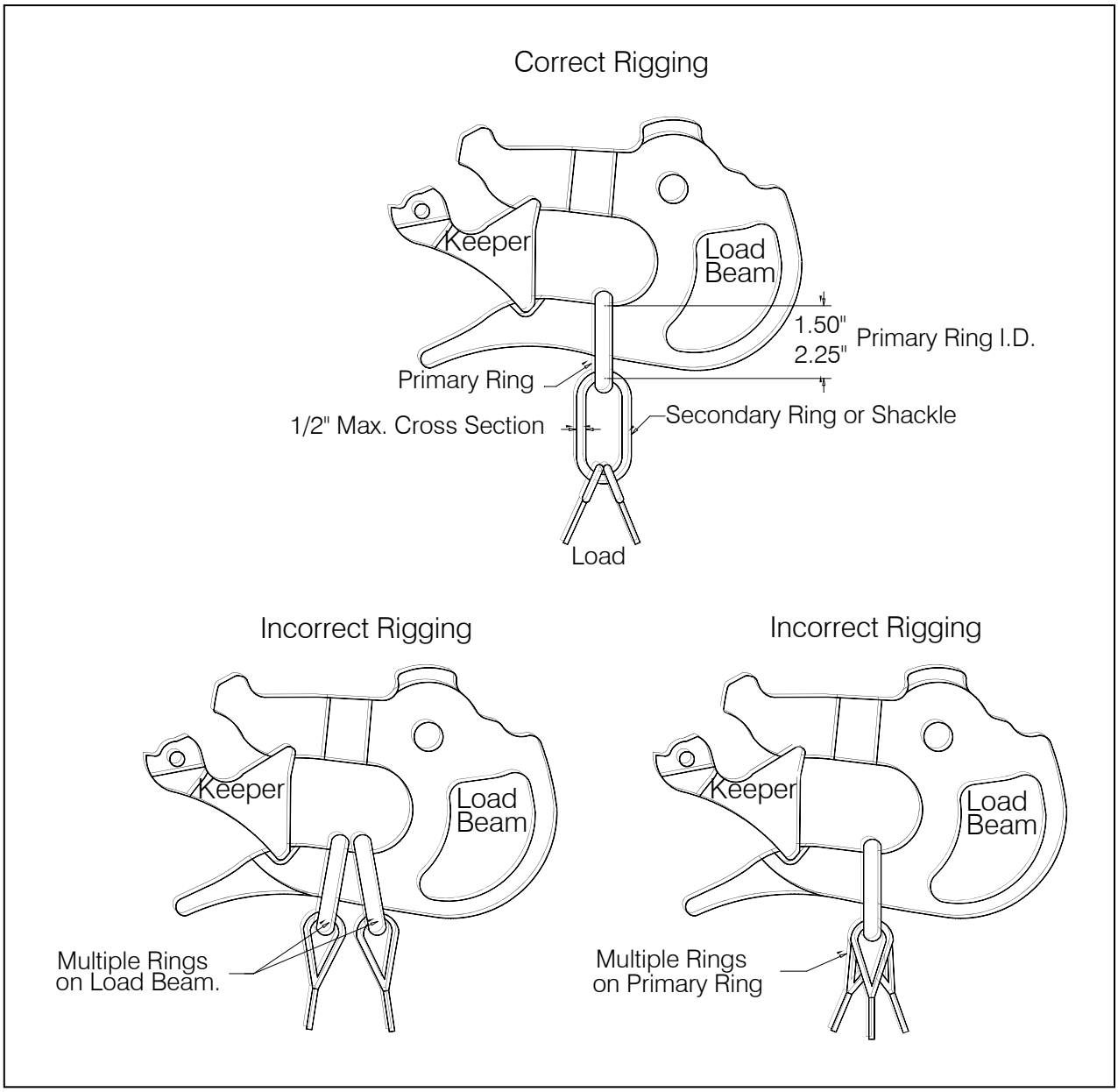

Un-Commanded Release Due to Too Large of a Load Ring

WARNING

Load rings that are too large will cause an un-commanded release. The ring will flip over the end of the load beam and flip the keeper up and then fall free. Only correctly sized load rings must be used. See examples below.

Figure 3-2 Un-Commanded Release Due to Too Large of a Load Ring

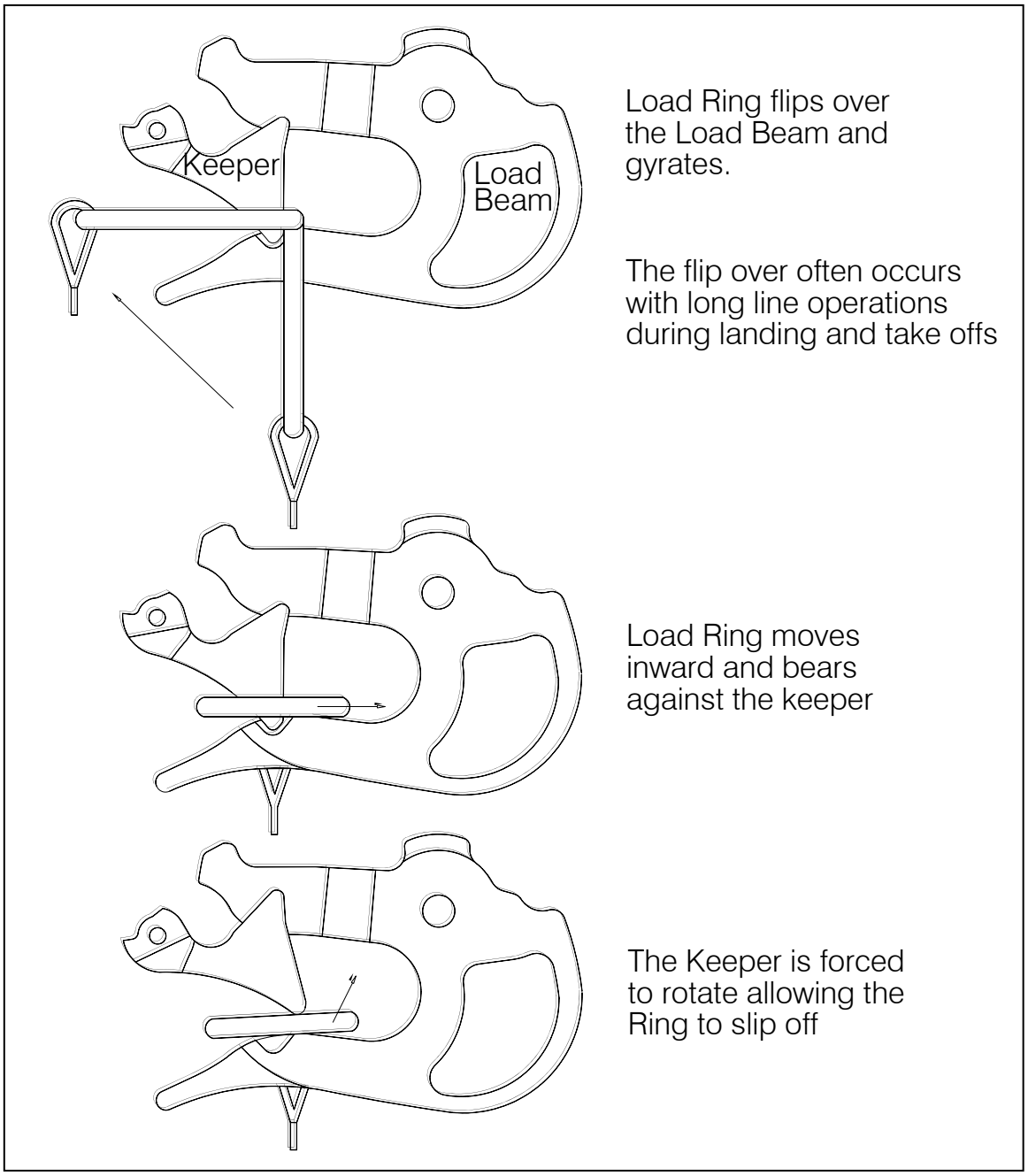

Load Hang-Up Due to Too Small of a Load Ring or Multiple Load Rings

WARNING

Load rings that are too small or multiple load rings will hang on the load beam when the load is released. Only correctly sized load rings must be used. See examples below.

Figure 3-3 Load Hang-Up Due to Too Small a Load Ring or Multiple Load Rings

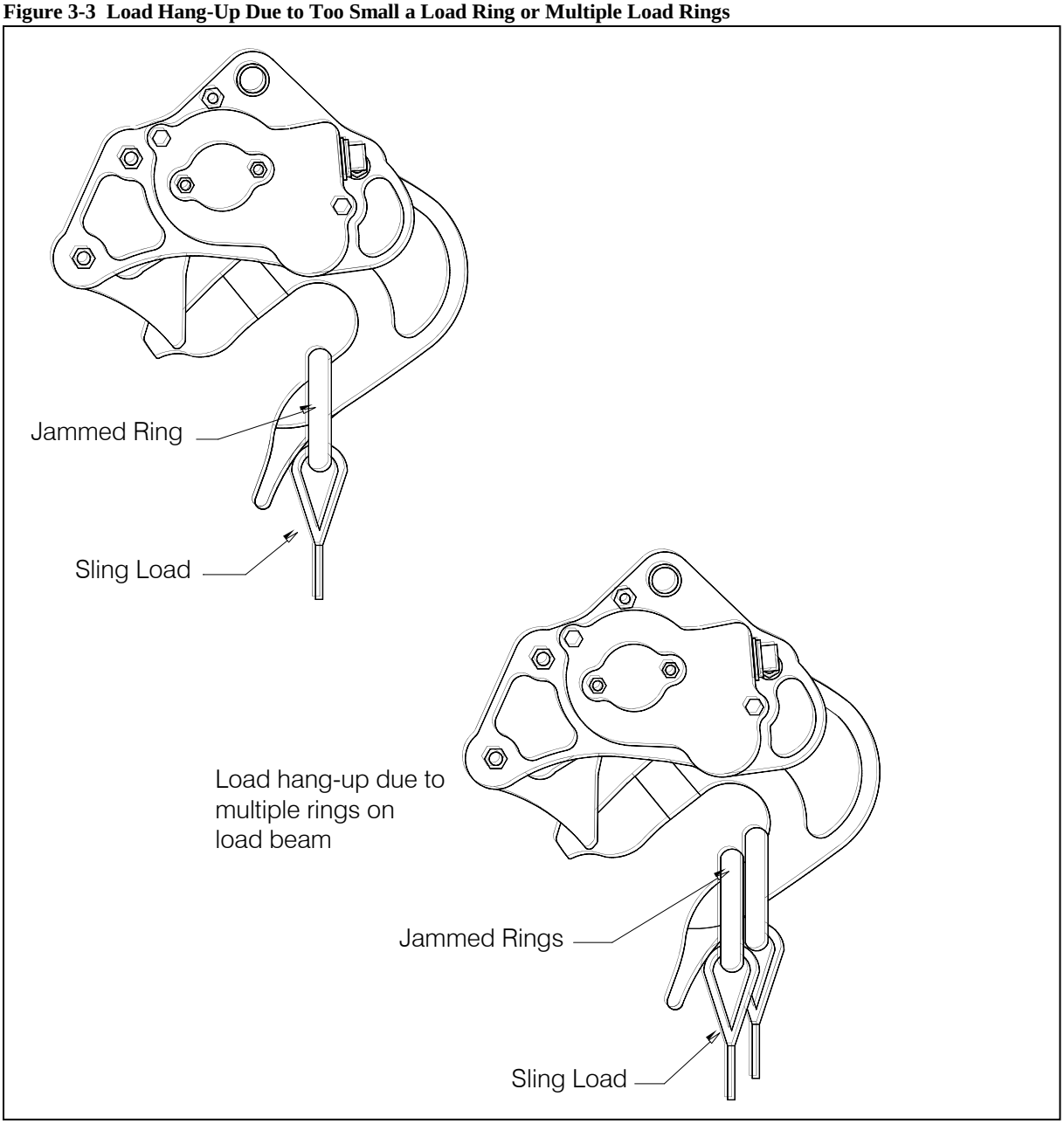

Un-Commanded Release Due to Nylon Type Straps

WARNING

Nylon type straps (or similar material) must not be used directly on the cargo hook load beam as they have a tendency to creep under the keeper and fall free. If nylon straps must be used they should be first attached to a correctly sized primary ring. Only the primary ring should be in contact with the cargo hook load beam. See examples below.

Figure 3-4 Un-Commanded Release Due to Nylon Type Straps

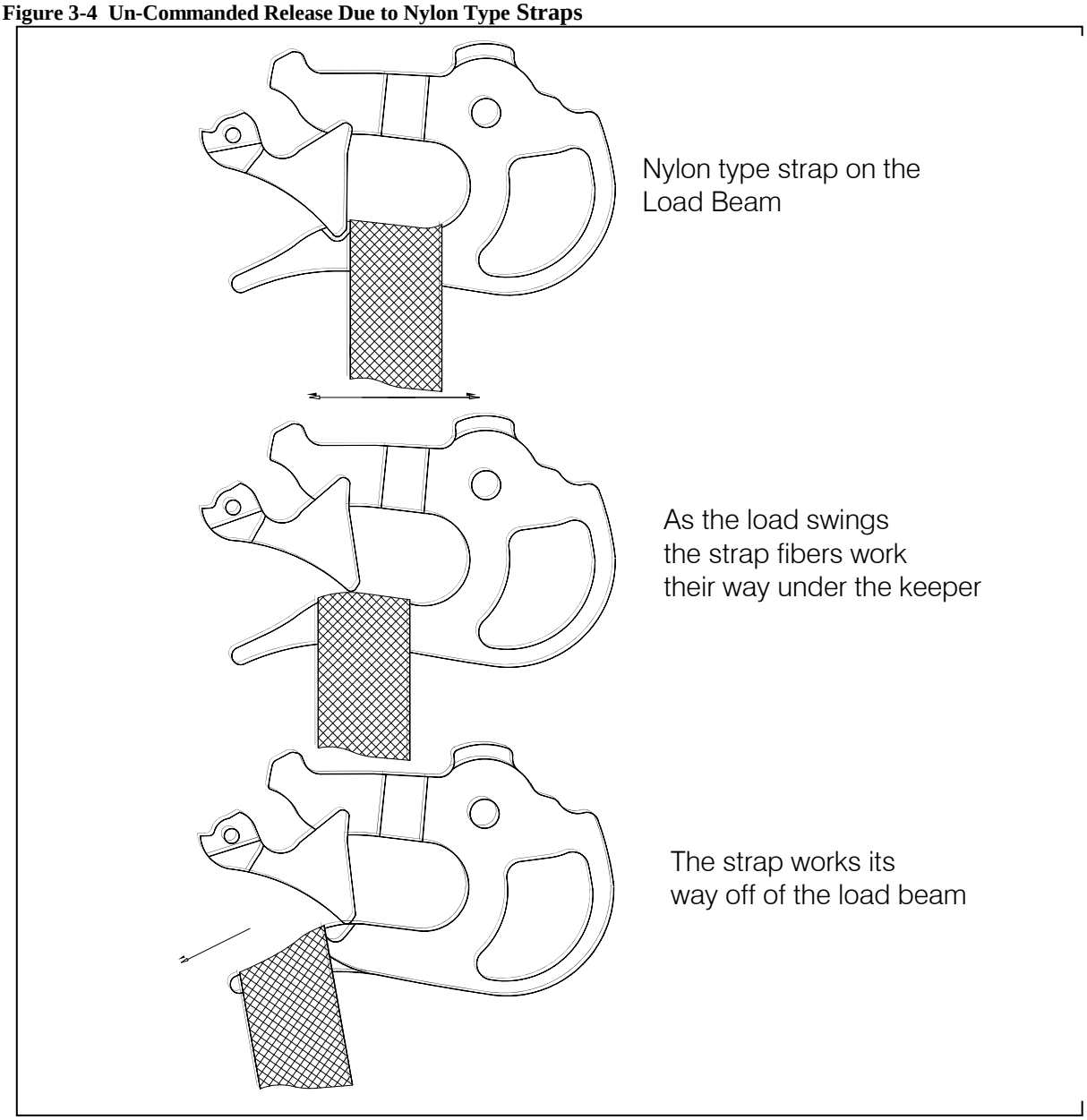

Un-Commanded Release Due to Cable or Rope Type Straps

WARNING

Cable or rope type straps must not be used directly on the cargo hook load beam. Their braided eyes will work around the end of the load beam and fall free. If cable or rope is used they should be first attached to a correctly sized primary ring. Only the primary ring should be in contact with the cargo hook load beam. See examples below.

Figure 3-5 Un-Commanded Release Due to Cable or Rope Type Straps

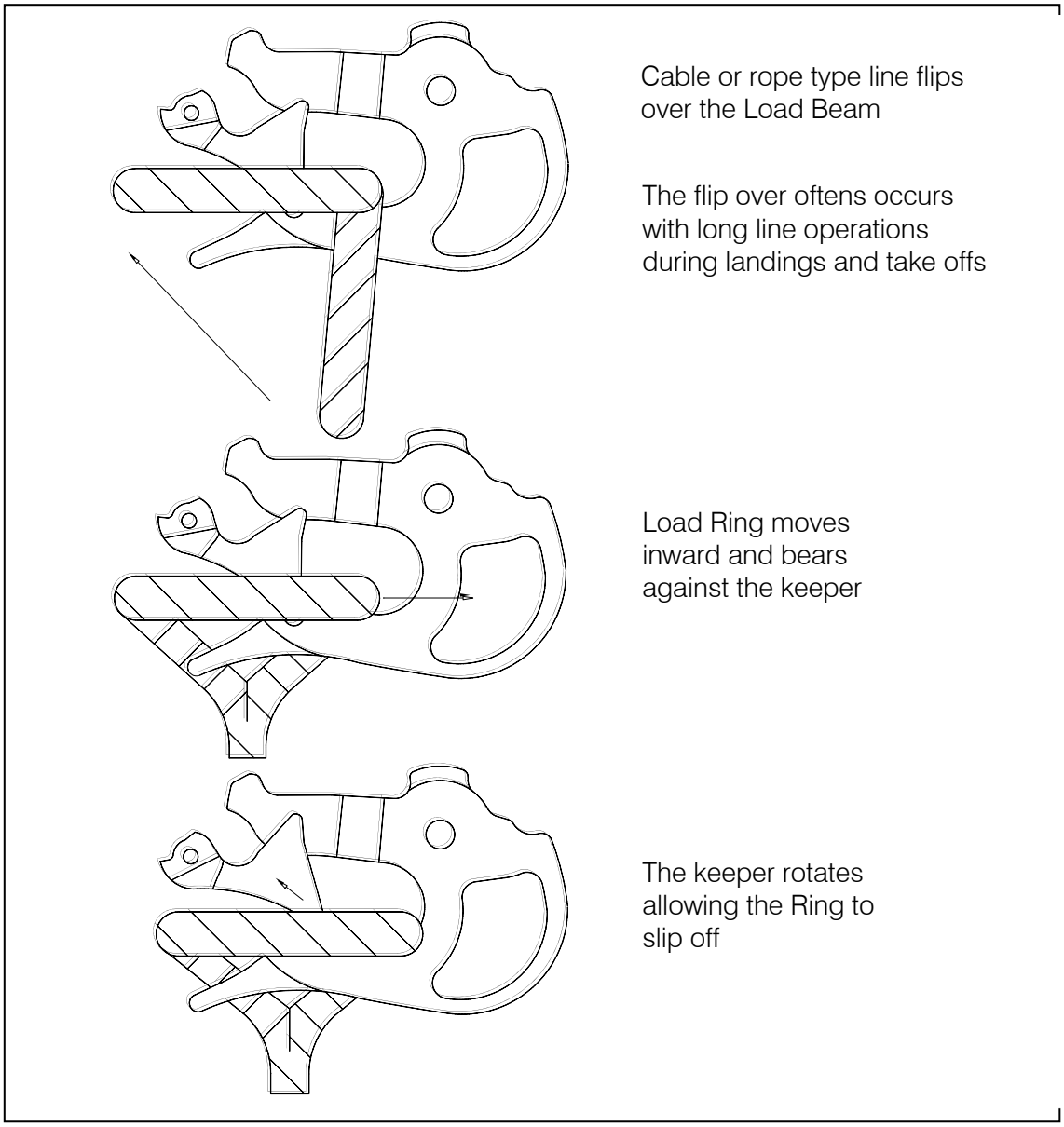

This page intentionally left blank.

Section 4
Maintenance

In addition to the Cargo Hook, Cargo Hook Kit P/N 200-229-00 includes two Release Fittings (P/N 290-403-00 and 290-744-00, only one is used depending on the configuration of the helicopter's manual release cable), Travel Limit Bumper (P/N 290-360-00), electrical connector (P/N 230-077-00) and miscellaneous hardware. The Release Fitting threads into the cargo hook manual release side and interfaces with the helicopter's existing manual release cable. These items (other than the cargo hook) require no maintenance other than a check, prior to external load operations, for damage and security.

Refer to Cargo Hook Service Manual 122-002-00 for detailed maintenance information for the cargo hook.

Instructions for Returning Equipment to the Factory

If an Onboard Systems product must be returned to the factory for any reason (including returns, service, repairs, overhaul, etc) obtain an RMA number before shipping your return.

NOTICE

An RMA number is required for all equipment returns.

- To obtain an RMA, please use one of the listed methods.
  - Contact Technical Support by phone or e-mail (Techhelp@OnboardSystems.com).
  - Generate an RMA number at our website: http://www.onboardsystems.com/rma.php
- After you have obtained the RMA number, please be sure to:
  - Package the component carefully to ensure safe transit.
  - Write the RMA number on the outside of the box or on the mailing label.
  - Include the RMA number and reason for the return on your purchase or work order.
  - Include your name, address, phone and fax number and email (as applicable).
  - Return the components freight, cartage, insurance and customs prepaid to:

    Onboard Systems
    13915 NW 3rd Court
    Vancouver, Washington 98685
    USA
    Phone: 360-546-3072

Certification

STC

United States of America
Department of Transportation—Federal Aviation Administration

Supplemental Type Certificate

Number **SR00558SE**

This certificate, issued to **Onboard Systems**
13915 NW 3rd Court
Vancouver, WA 98685

certifies that the change in the type design for the following product with the limitations and conditions therefor as specified hereon meets the airworthiness requirements of Part 27 *of the* Federal Aviation *Regulations.*

Original Product—Type Certificate Number: H9EU
Make: Eurocopter France
Model: AS-350B, AS-350B1, AS350B2, AS350BA, and AS-350D

Description of the Type Design Change: Fabrication of Onboard Systems Model 200-229-00 Cargo Hook Kit in accordance with FAA approved Onboard Systems Master Drawing List No. 155-040-00, dated May 20, 1998, or later FAA approved revision; and, installation of this system in accordance with FAA approved Onboard Systems Owner's Manual No. 120-072-00, dated May 10, 1998, or later FAA approved revision. Inspect cargo hook kit in accordance with Section 4 of Onboard Systems Owner's Manual No. 120-072-00, dated May 10, 1998, or later FAA approved revision.

Limitations and Conditions: Approval of this change in type design applies only to those Eurocopter model rotorcraft listed above, which are equipped with an FAA approved installation of Breeze Eastern P/N 17149-1 or 14027-4, or Siren P/N S1609-3, -5, and -6 cargo hooks or those modified by installation of an Onboard Systems load weigh system per STC SH1262NW. This approval should not be extended to rotorcraft of these models on which other previously approved modifications are incorporated unless it is determined by the installer that the relationship between this change and any of those other previously approved modifications, including changes in type design, will introduce no adverse effect upon the airworthiness of that rotorcraft. Rotorcraft equipped with the 200-229-00 cargo hook kit must be operated in accordance with FAA approved Rotorcraft Flight Manual Supplement (RFMS) No. 120-072-00, dated August 20, 1998, or later FAA approved revision.

(See Continuation Sheet - Page 3)

This certificate and the supporting data which is the basis for approval shall remain in effect until surrendered, suspended, revoked, or a termination date is otherwise established by the Administrator of the Federal Aviation Administration.

Date of application: May 28, 1998
Date of issuance: August 20, 1998
Date reissued:
Date amended: January 13, 2003

By direction of the Administrator

(Signature)

Acting Manager, Seattle Aircraft Certification Office
(Title)

Any alteration of this certificate is punishable by a fine of not exceeding $1,000, or imprisonment not exceeding 3 years, or both.

This certificate may be transferred in accordance with FAR 21.47.

FAA FORM 8110-2(10-68)

United States of America

Department of Transportation—Federal Aviation Administration

Supplemental Type Certificate

(Continuation Sheet)

Number **SR00558SE**

Limitations and Conditions continued:

A copy of this Certificate and FAA approved RFMS must be maintained as part of the permanent records of the modified rotorcraft.

If the holder agrees to permit another person to use this certificate to alter the product, the holder shall give the other person written evidence of that permission.

- END -

Any alteration of this certificate is punishable by a fine of not exceeding $1,000, or imprisonment not exceeding 3 years, or both.

FAA FORM 8110-2-1 (10-69) *This certificate may be transferred in accordance with FAR 21.47.*

PAGE 3 OF 3 PAGES

STA

Transport Canada Transports Canada

Department of Transport

Supplemental Type Certificate

This approval is issued to:

Onboard Systems
11212 NW St. Helens Road
Portland, OR
USA 97231

Number: SH98-51

Issue No.: 1
Approval Date: September 14, 1998
Issue Date: September 14, 1998

Responsible Office: Pacific

Aircraft/Engine Type or Model: Europter France AS350B, B1, B2, BA and D

Canadian Type Certificate or Equivalent: H83

Description of Type Design Change: **Fabrication and Installation of Onboard Systems Cargo Hook Kit per FAA STC SR00558SE**

Installation/Operating Data, Required Equipment and Limitations: **Fabrication** of Onboard Systems Model 200-229-00 Cargo Hook Kit in accordance with FAA approved Onboard Systems Master Drawing List No. 155-040-00, dated May 20, 1998 * ; and, **Installation** of this cargo hook kit in accordance with FAA approved Onboard Systems Owner's Manual No. 120-072-00, dated May 10, 1998 * . **Inspect** cargo hook systems in accordance with Section 4 of Onboard Systems Owner's Manual No. 120-072-00, dated May 10, 1998 *.

(* or later FAA approved revisions)

— See Continuation Sheet —

Conditions: This approval is only applicable to the type/model of aeronautical product specified therein. Prior to incorporating this modification, the installer shall establish that the interrelationship between this change and any other modification(s) incorporated **will not** adversely affect the airworthiness of the modified product.

J. H. Nehera
Regional Manager - Aircraft Certification
For Minister of Transport

Canada

Department of Transport

Supplemental Type Certificate

(Continuation Sheet)

Number: SH98-51
Issue No.: 1
Approval Date: September 14, 1998
Issue Date: September 14, 1998

Notice:
This Addendum shall remain part of the Supplemental Type Certificate referred therein.

Limitations and Conditions:

1. Approval of this change in type design applies to only those Europter France model rotorcraft listed on the front page, which are equipped with an FAA approved installation of Breeze-Eastern P/N 17149-1 or 14027-4, or Siren P/N S1609-3, -5 and -6 cargo hooks or those modified by installation of an Onboard Systems load weight system per STC SH85-8.

2. This installation should not be incorporated in any rotorcraft on which other previously approved modifications are incorporated unless it is determined that the interrelationship between this installation and any previously approved modifications, including changes in type design, will not introduce any adverse effect upon the airworthiness of the rotorcraft.

3. Rotorcraft equipped with the Onboard Systems Model 200-229-00 Cargo Hook Kit must be operated in accordance with FAA approved Onboard Systems Rotorcraft Flight Manual Supplement (RFMS) No. 120-072-00, dated August 20, 1998 or later FAA approved revision. A copy of this Certificate and FAA Approved RFMS must be maintained as part of the permanent records for the modified rotorcraft.

4. If the STC holder agrees to permit another person to use this certificate to alter the product, the STC holder shall give the other person written evidence of that permission.

..... End .....

Canada

FAA APPROVED

ROTORCRAFT FLIGHT MANUAL SUPPLEMENT

Eurocopter Helicopter Models
AS-350B, AS-350B1, AS350B2, AS350BA & AS-350D

R/N _____ **S/N** _____

FAA Approved: _____
Manager, Special Certification Branch
Seattle Aircraft Certification Office

Date: AUG 20 1998
Revised:

ONBOARD SYSTEMS INTERNATIONAL	Rotorcraft Flight Manual Supplement	Document Number 120-072-00	
	Cargo Hook	Page 1	

INTRODUCTION

This supplement must be attached to the appropriate approved Eurocopter Rotorcraft Flight Manual when an Onboard Systems 200-229-00 Cargo Hook Kit is installed in accordance with Supplemental Type Certificate (STC) NO. SR00558SE. The information contained herein supplements or supersedes the basic manual only in those areas listed herein. For limitations, procedures and performance information not contained in this supplement, consult the basic Rotorcraft Flight Manual.

I. LIMITATIONS

The basic Flight Manual remains applicable. When an Onboard Systems 200-229-00 Cargo Hook Kit is installed, the following placard applies:

- Mounted on bottom of Cargo Hook.

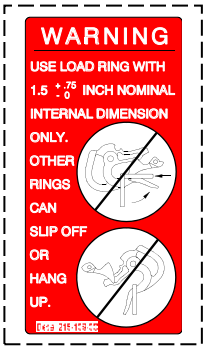

II. PERFORMANCE

The basic Flight Manual and Eurocopter Rotorcraft Flight Manual Supplement-Cargo Hook remains applicable.

III. PROCEDURES

Before each Cargo Hook use perform the following procedures. If the procedures are not successful do not use the equipment until the problem has been corrected.

Inspect all mounting fasteners to ensure that they are tight.
Visually inspect the electrical connector for loose or damaged pins and sockets.
Operate the keeper manually and check that it snaps back to its normal position on the load beam.
Inspect the case and covers for cracks and damage.
Inspect the load beam for gouges and cracks.
Cycle the manual release mechanisms to ensure proper operation.
Cycle the electrical release mechanisms to ensure proper operation.

III. PROCEDURES, continued

Cargo Hook Rigging

Extreme care must be exercised in rigging a load to the Cargo Hook. If the load ring is too big it may work its way around the end of the load beam and be supported for a time on the keeper and then fall free. If the load ring is too small it may jam itself against the load beam during an attempted release. The following illustrations show recommended configurations and potential difficulties that must be avoided.

WARNING: The examples shown are not intended to represent all problem possibilities. It is the responsibility of the operator to assure the hook will function properly with the rigging.

Figure 1 Examples of correct and incorrect cargo hook rigging

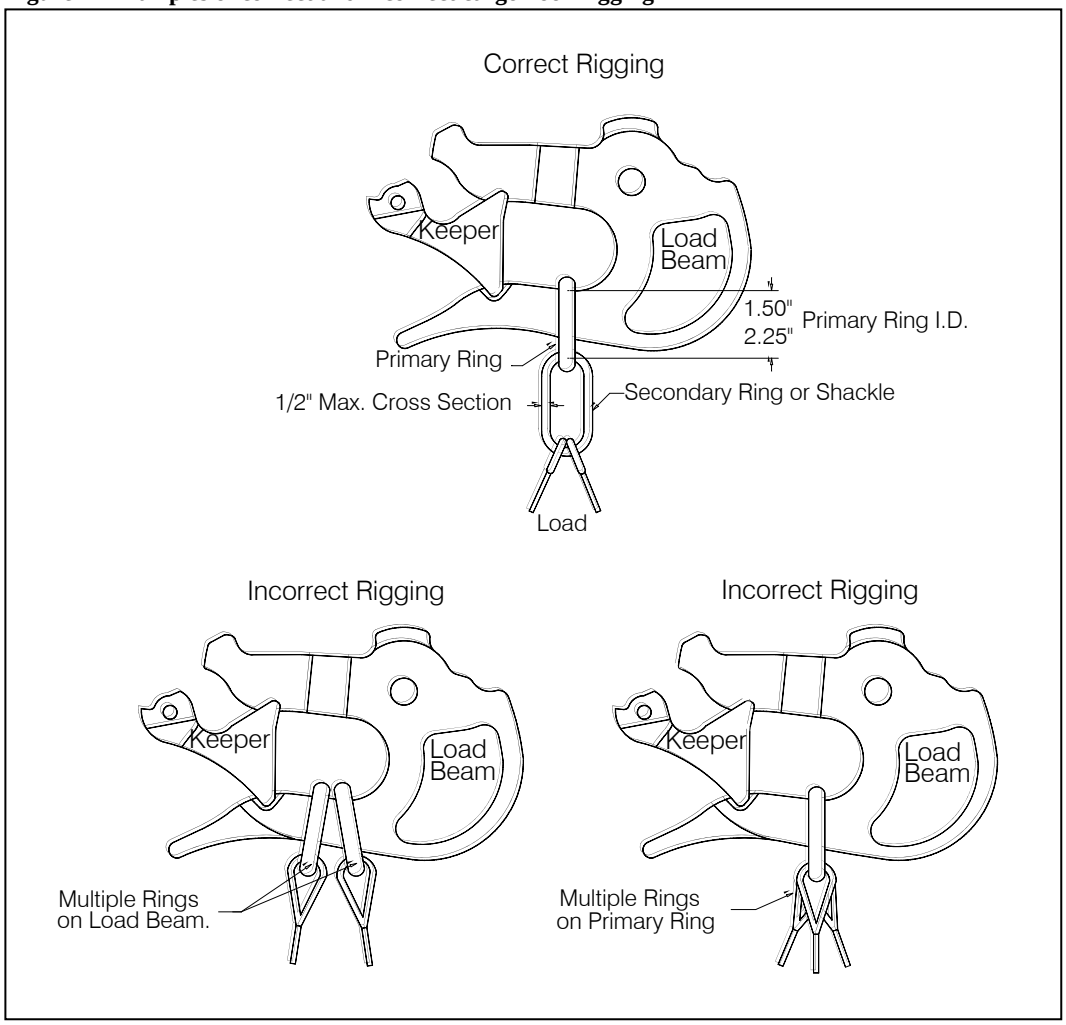

III. PROCEDURES, continued

Un-Commanded Release Due to Too Large of a Load Ring

WARNING: Load rings that are too large will cause an un-commanded release. The ring will flip over the end of the load beam and flip the keeper up and then fall free. Only correctly sized load rings must be used. See examples below.

Figure 2 Un-commanded release due to load rings that are too large

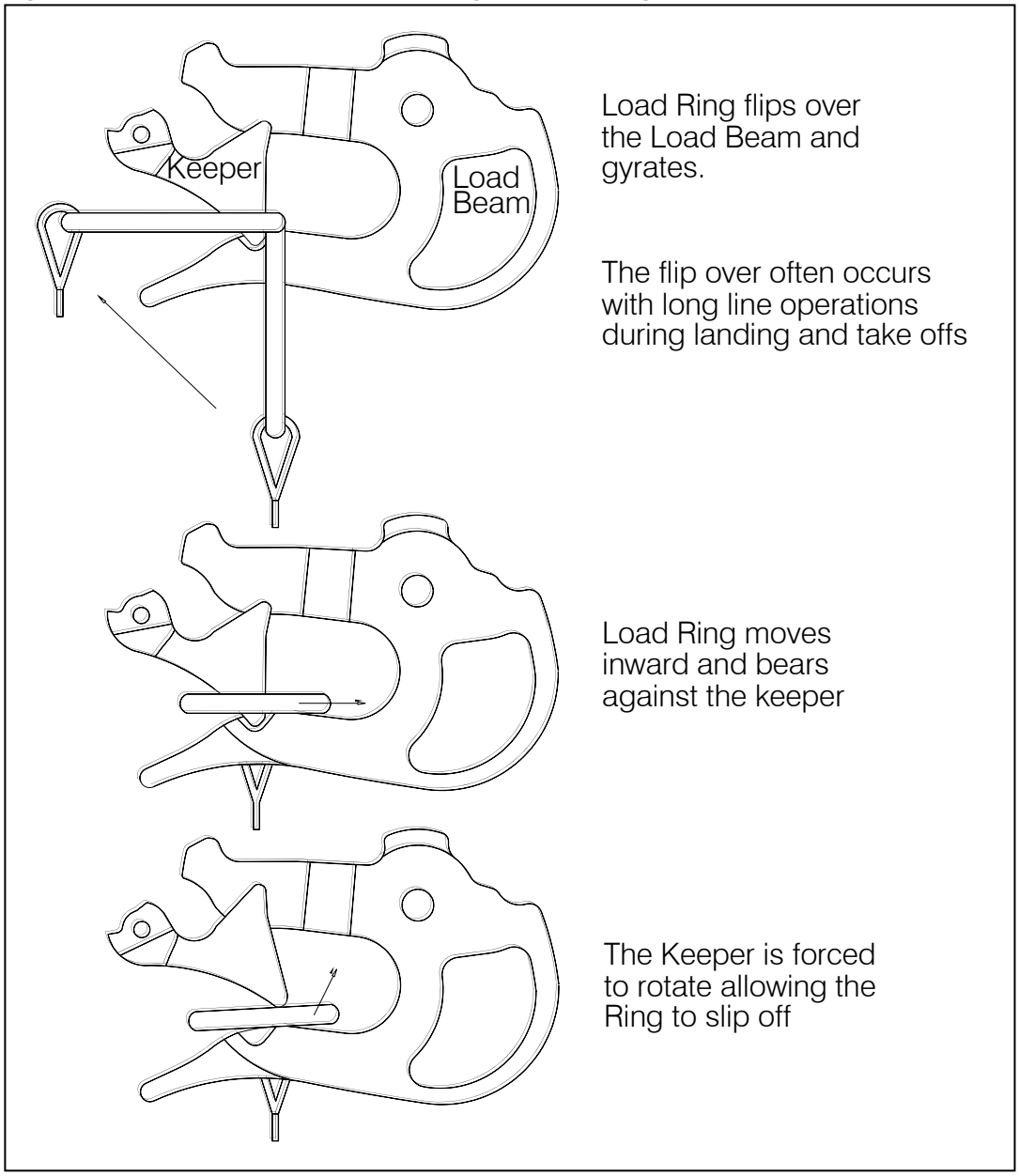

III. PROCEDURES, continued

Load Hang-Up Due to Too Small of a Load Ring or Multiple Load Rings

WARNING: Load rings that are too small or multiple load rings will hang on the load beam when the load is released. Only correctly sized load rings must be used. See examples below.

Figure 3 Load hang-up due to load rings that are too small or using multiple load rings

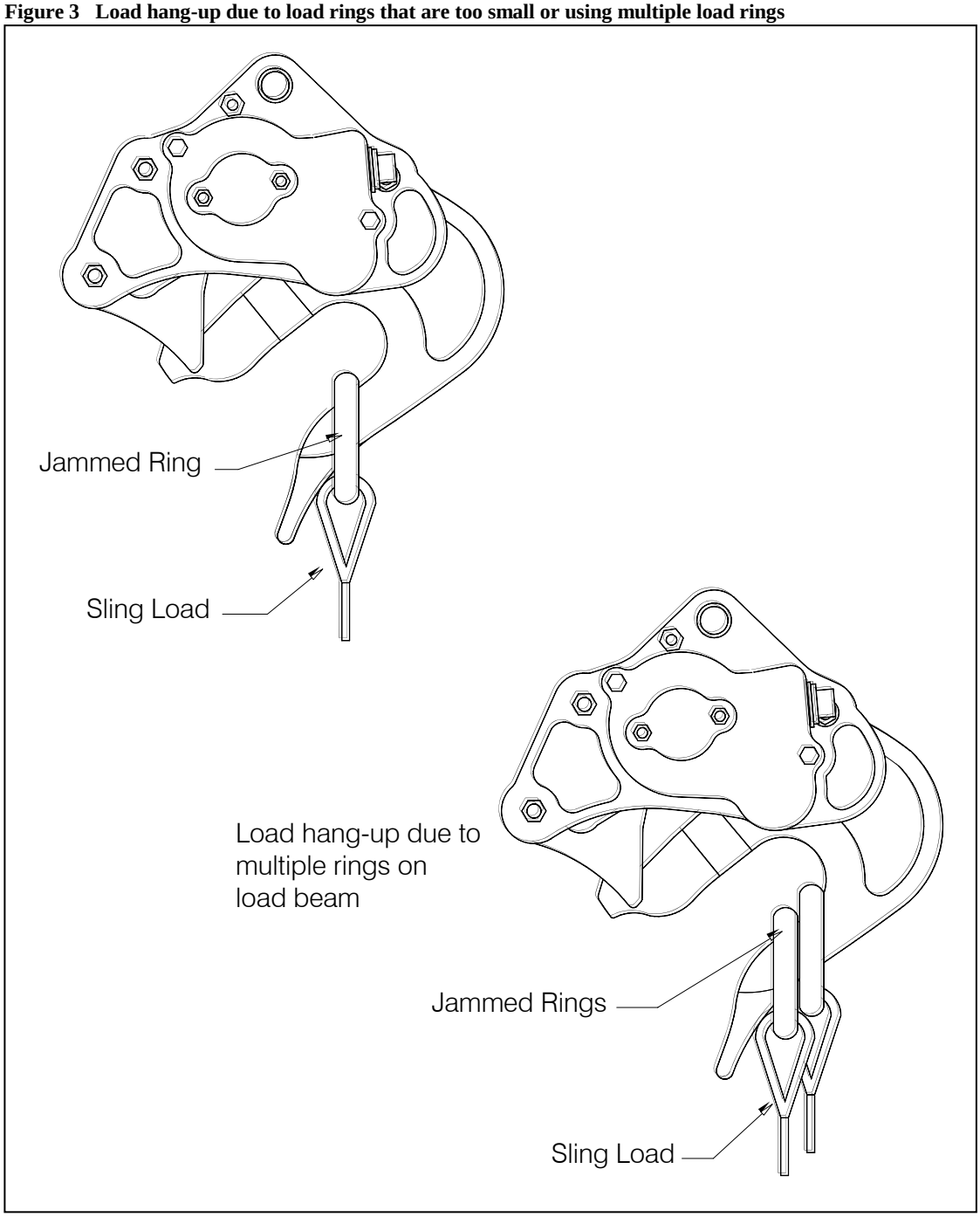

III. PROCEDURES, continued

Un-Commanded Release Due to Nylon Type Straps

WARNING: Nylon type straps (or similar material) must not be used directly on the cargo hook load beam as they have a tendency to creep under the keeper and fall free. If nylon straps must be used they should first be attached to a correctly sized primary ring. Only the primary ring should be in contact with the cargo hook load beam. See examples below.

Figure 4 Un-commanded release due to nylon type straps

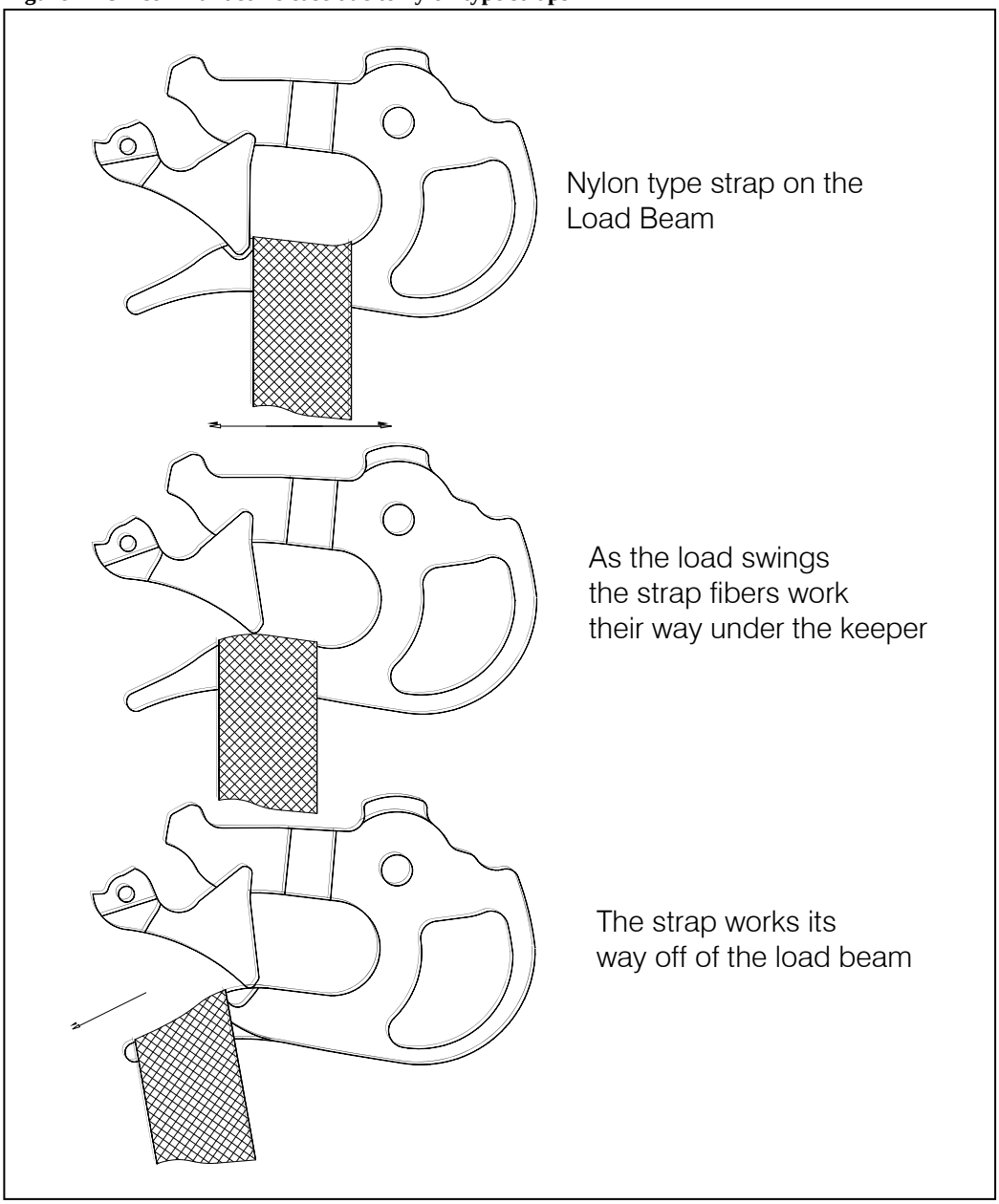

III. PROCEDURES, continued

Un-Commanded Release Due to Cable or Rope Type Straps

WARNING: Cable or rope type straps must not be used directly on the cargo hook load beam. Their braided eyes will work around the end of the load beam and fall free. If cable or rope is used they should first be attached to a correctly sized primary ring. Only the primary ring should be in contact with the cargo hook load beam. See examples below.

Figure 5 Un-commanded release due to cable or rope type straps